Jeep Grand Cherokee WK2

MY2017-2021

Pre-Runner/ Steel Front Bumper

IMPORTANT! – READ BEFORE INSTALLATION

- When installed in accordance with these instructions, the front protection bar does not affect the operation of the vehicles SRS airbags.
- This product must be installed exactly as per these instructions using only hardware supplied.
- Take a few moments to read instructions thoroughly before beginning work.
- In the event of damage to any component please contact OFFROAD ANIMAL to arrange repair/replacement of components.
- Do not use this product for any vehicle make or model other than that specified on these instructions.
- Do not remove labels from this product.
- This product and its fixings must not be modified in any way unless stated in these fitting instructions.
- The installation of this product is recommended for trained personnel.
- These instructions are correct at time of publication. OFFROAD ANIMAL cannot be held responsible for the impact of any changes subsequently made by the vehicle manufacturer. If you find something has changed please contact us to let us know!
- During installation it is the duty of the installer to check correct operation/clearances of all components.
- If Instructions are to be printed for reference in the workshop, it is recommended that they are printed in colour, for best legibility.
- Note All photographs in instruction show AUS market vehicle. Vehicles in other markets may differ slightly from what is shown in images.
- Estimated install time: 2 - 3 hours

GENERAL CARE AND MAINTENANCE

Use caution when cleaning with pressure washers, as they may compromise the product coating's integrity. Exercise care to avoid surface damage.

Only wash the product with a PH neutral car wash to prevent paint damage and discolouration.

Do not use acidic or alkaline based cleaning products.

Plastic parts may be maintained with silicone spray.

It is important to perform regular checks (pre/during/post trip or on an annual basis) on the installed product. More frequent checks may be required in extreme use cases. Checks include:

- Visual inspection for damage (eg. cracks, chips, dents etc.)
- Electrical wiring is not rubbing anything or worn out
- Bolts are torqued to correct specification (see torque guide below)

For touching up small stone chips, Offroad Animal recommends the following paint products:

- Dupli-Color Trim & Bumper Paint Black (TB101)
- VHT Hood, Bumper & Trim Paint Black (SP27)

BOLT TORQUE SETTINGS

Use the following bolt torques on all general fasteners, unless otherwise specified.

GENERAL FASTENERS	
Size	**Torque Nm**
M5	5 Nm
M6	9 Nm
M8	22 Nm
M10	44 Nm
M12	77 Nm

Use the following bolt torques on all structural front bar mount and tow point fasteners, and rear towbar fasteners, unless otherwise specified.

FRONT BAR MOUNTS AND TOW POINTS + REAR TOWBAR	
Size	**Torque Nm**
M10	57 Nm
M12	100 Nm
M14	164 Nm
M16	248 Nm

Always use a torque wrench to set correct torque settings. Ensure torque wrench is set to Nm unit of measurement. Otherwise perform conversion to lb-ft.

PARTS LISTING

IMPORTANT: Check all parts are present before beginning work! Contact OFFROAD ANIMAL if something is missing.

Main Parts – In the Box

Qty	Part Number	Description	Image
1	PR-JGC-WK2-17-ASM1	wk2 2017 pre runner kit no mounts	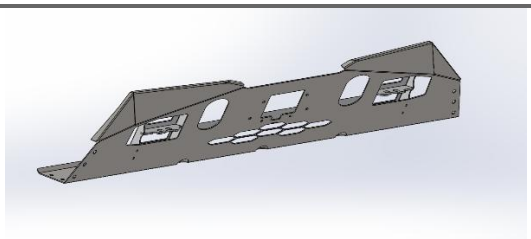
1	RP-JGC-WK2-11-ASM0	Recovery Points Wk2 (some customers may already have these)	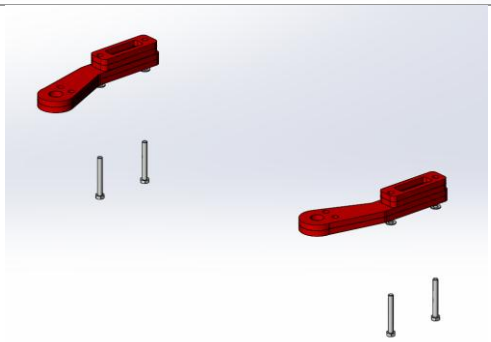
1	W-0015L	Wk2 Pre-Runner wing LH	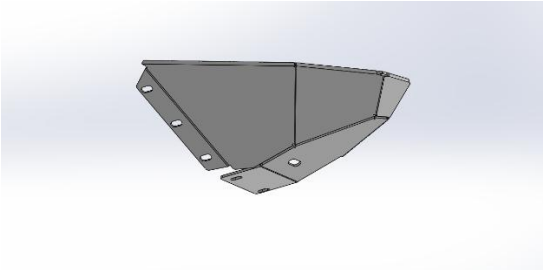
1	W-0015R	Wk2 Pre-Runner wing RH	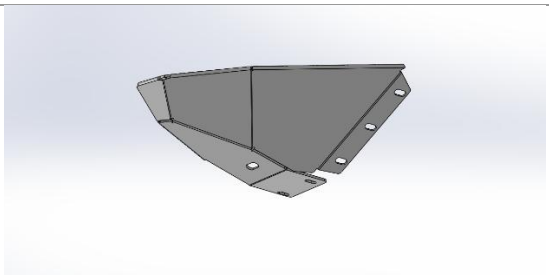
1	P-0021	Acc Cover	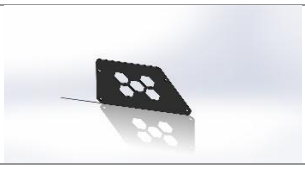

1	B-0283L	Pre-Runner wing support LH	
1	B-0283R	Pre-Runner Wing support RH	
1	B-0320L	2017 PR PLATE MOUNT LH	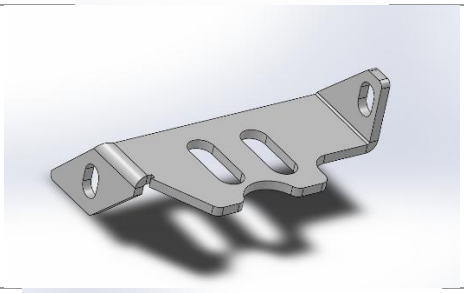
1	B-0320R	2017 PR PLATE MOUNT RH	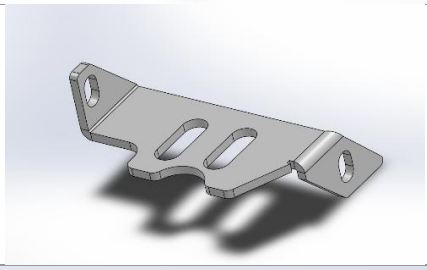
1	B-0087	AIR SUSPENSION BRACKET	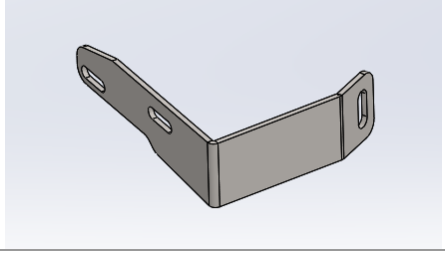
Extra / Optional Parts			
1	B-0300	2017 Acc mount wk2 **(Purchased Option ACC Cover Kit)**	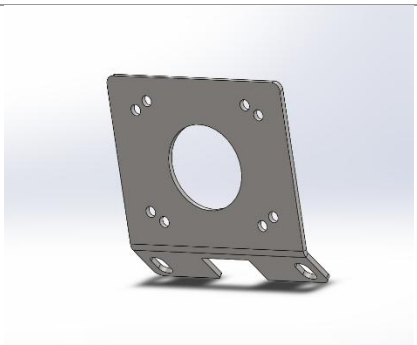
1	B-0063	Acc cover **(Purchased Option ACC Cover Kit)**	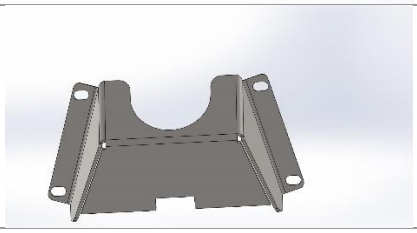

1	**B-0325L**	2017 Nudge bar bracket **(Supplied with nudge bar)**	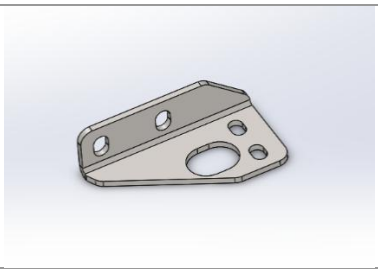
1	**B-0325R**	2017 Nudge bar bracket **(Supplied with nudge bar)**	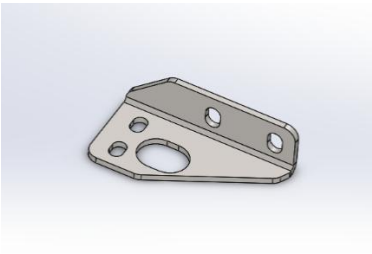

Small Parts – Contained in Small Parts Kit Bag

Qty	Part Number	Description
12	M8 FW Black Zinc	M8 Flat washer black zinc plate
12	M8 x 20 BHCS BZ	M8 x 20 Button Head Cap Screw, Black Zinc
12	M8 FN	M8 Flange Nut
4	M6x16 BHCS BZ	M6 x 16 Button Head Cap Screw, Black Zinc
4	M6 FW BZ	M6 Flat washer, Black Zinc
8	M6 FN	M6 Flange Nut
8	M10 FW	M10 Flat Washer
4	M6 x 16 BHCS BZ	M6 x 16 Button Head Cap Screw, black zinc
4	M10 x 45	M10 x 45 Hex Bolt, Zinc Plate
4	M10 X 25	M10X25 Hex Bolt, Zinc Plate
1	OFA-LOGO	OFFROAD ANIMAL METAL LOGO
1	Pinch Weld 2M	Pinch Weld Black 14mm x 9mm x 2M
4	M5 x 30 pan	M5 x 30 Pan head screw zinc **Optional extra part (ACC KIT)**
2	M8 x 30	M8 x 30 Hex zinc **Optional extra part (ACC KIT)**
2	M8 FW	M8 Flat washer **Optional extra part (ACC KIT)**
2	M8 FN	M8 Flange nut **Optional extra part (ACC KIT)**

TOOLS REQUIRED

The following tools will be required to install the product.

Hand Tools	Power Tools	Workshop Equipment
10mm Spanner 13mm Spanner 16mm Spanner 4mm Allen Key 5mm Allen Key 10mm Socket 13mm Socket 16mm Socket Ratcheting Socket Wrench Flat head screw driver or Pry Tool Side Cutters Phillips head screw driver	*US Customers (Option 2)* *Electric Drill* *Angle Grinder Or Air Hacksaw / Reciprocating Saw*	*US Customers (Option 2)* *Paint / Primer Or Paint Pen*

GENERAL WARNINGS

Take care not to lose factory hardware, as some will be re-used.

Take care not to damage parking sensors.

If ACC radar is not working as it should, stand side on to the vehicle and check alignment. If sensor position is not straight ahead (i.e. pointing up or down towards ground) adjust screws to return sensor to level position.

WORKSHOP SAFETY

It is the responsibility of the installer to always complete works in a safe manner. Make sure the following safety equipment is available and precautions are observed whilst fitting this product.

Hearing Protection	Always wear ear protection when using power tools.
Eye Protection	Ensure eye protection is always worn when cutting or drilling.
Manual Handling	Do not attempt to lift bar assemblies or rock sliders on your own. Always use two people to lift or use mechanical Lifting aid such as hydraulic lifting trolley.
Vehicle Support	Always ensure vehicle is properly supported when working on it. Do not attempt to fit products whilst suspension work is being carried out. Do not work under a vehicle supported only by a jack.

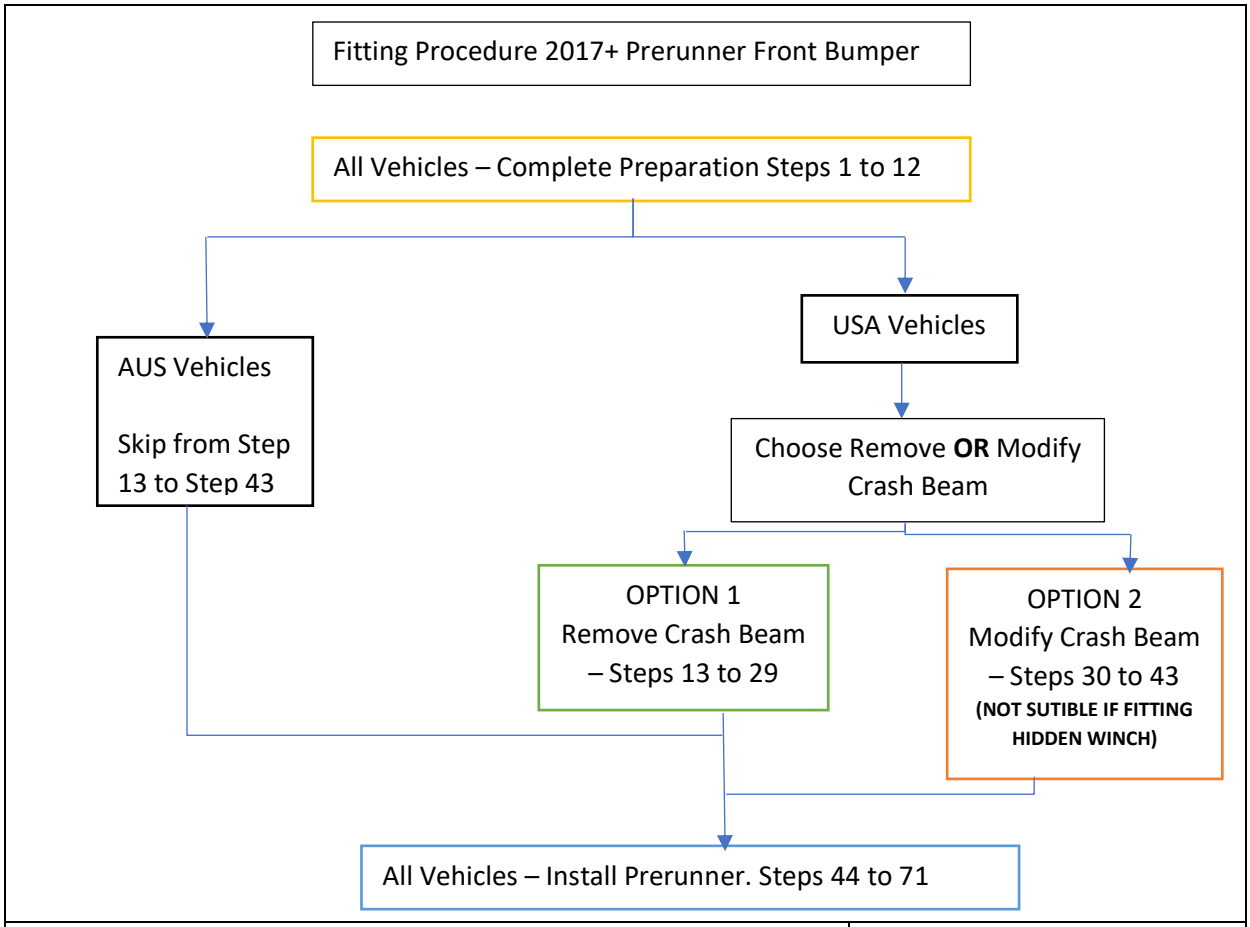

Fitting Procedure differs slightly between USA market and AUS market vehicles.

USA Market vehicles have a different crash beam structure that requires removal or modification to allow the fitment of the Prerunner bumper.

You can choose to either remove or modify the crash beam depending on your preference.

Australian vehicles do not need any modifications to the crash beam structure.

Refer to above diagram to determine which steps are applicable to your region and installation choice.

IMPORTANT NOTE: IF ALSO FITTING HIDDEN WINCH MOUNT DO THIS FIRST, BEFORE FITTING THE PRERUNNER KIT. REFER TO INSTRUCTIONS FOR HIDDEN WINCH MOUNT

IF ALSO FITTING OFFROAD ANIMAL BASH PLATE, DO SO AT TIME SPECIFIED IN THIS INSTRUCTION SEE STEP 44.

TOOLS REQUIRED

FASTENERS

ALL VEHICLES – DISASSEMBLY AND PREPARATION

NOTE: Images may vary from your vehicle, depending on country and trim / specification level.

1. First remove the lower air dam fascia. To do this climb under your Jeep and remove all 7 quarter turn clips by hand. Two are tucked up high in each corner and 3 in the middle, with another two off to the side not tucked up.

2. Once they are removed pull the entire lower air dam away from Jeep by hand. You will not be reusing this part

TOOLS REQUIRED

None

FASTENERS

Retain only if you wish to refit later

3. Remove factory Lower Radiator Cover. 3x M6 bolts on front and 2x M8 bolts on back. Use 10mm socket or spanner for front and 13mm for rear.

TOOLS REQUIRED

10mm Socket or Spanner
13mm Socket or Spanner

FASTENERS

Retain for reuse

4. Remove factory tie down and or tow points

5. Vehicles equipped with Mopar tow points, First remove the M20 Nut and 2xM10 Bolts to remove the main hook. Then remove the 2x Bolts securing the tow hook mounting bracket. Complete on both sides.

TOOLS REQUIRED

Socket set

FASTENERS

Discard fasteners

ALL VEHICLES – DISASSEMBLY AND PREPARATION

6. Stack Offroad Animal Tow points together as shown with M10 bolts and M10 flat washers.

TOOLS REQUIRED

FASTENERS

M10x80 Hex bolts (4)
M10 Flat Washers (4)

ALL VEHICLES – DISASSEMBLY AND PREPARATION

7. Fit Offroad Animal Tow points as shown on LH and RH side with M10x80 bolts directly into frame of Jeep.

8. Torque Bolts to 70Nm (51 Ft Lbs.) using Torque Wrench.

USA NOTE: IF CHOOSING CRASH BEAM TRIM OPTION (OPTION 2) DO NOT TORQUE BOLTS AT THIS STAGE

TOOLS REQUIRED

16mm Socket or Spanner
Torque Wrench

FASTENERS

M10x80 (4)
M10 Flat washers (4)

9. If Adaptive cruise control is fitted, unplug loom and pull sensor off the mounting posts.

TOOLS REQUIRED

Trim tool
Or
Flat head screwdriver

FASTENERS

Retain factory clips

ALL VEHICLES – DISASSEMBLY AND PREPARATION

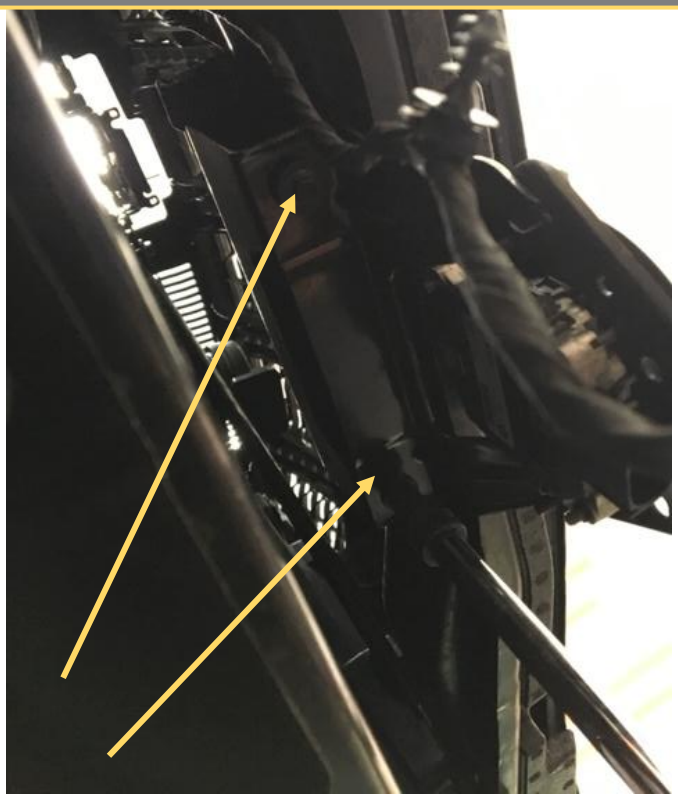

10. Remove Bracket that holds sensor

TOOLS REQUIRED

8mm Socket

FASTENERS

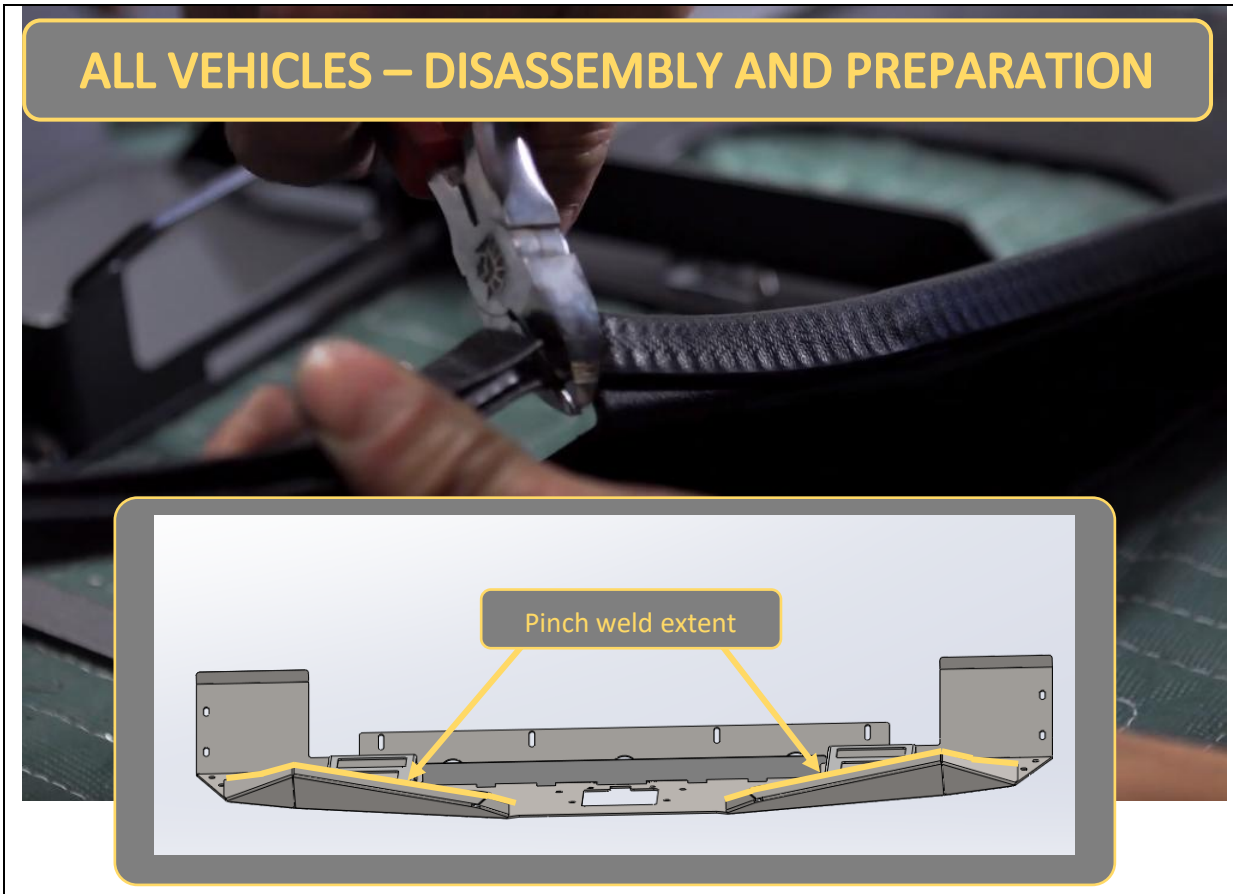

11. Prepare the Prerunner plate for fitment. First Fit Pinch weld to top edges of Prerunner plate. Trim edges of pinch weld at edge of plate.

TOOLS REQUIRED

Side cutters

FASTENERS

ALL VEHICLES – DISASSEMBLY AND PREPARATION

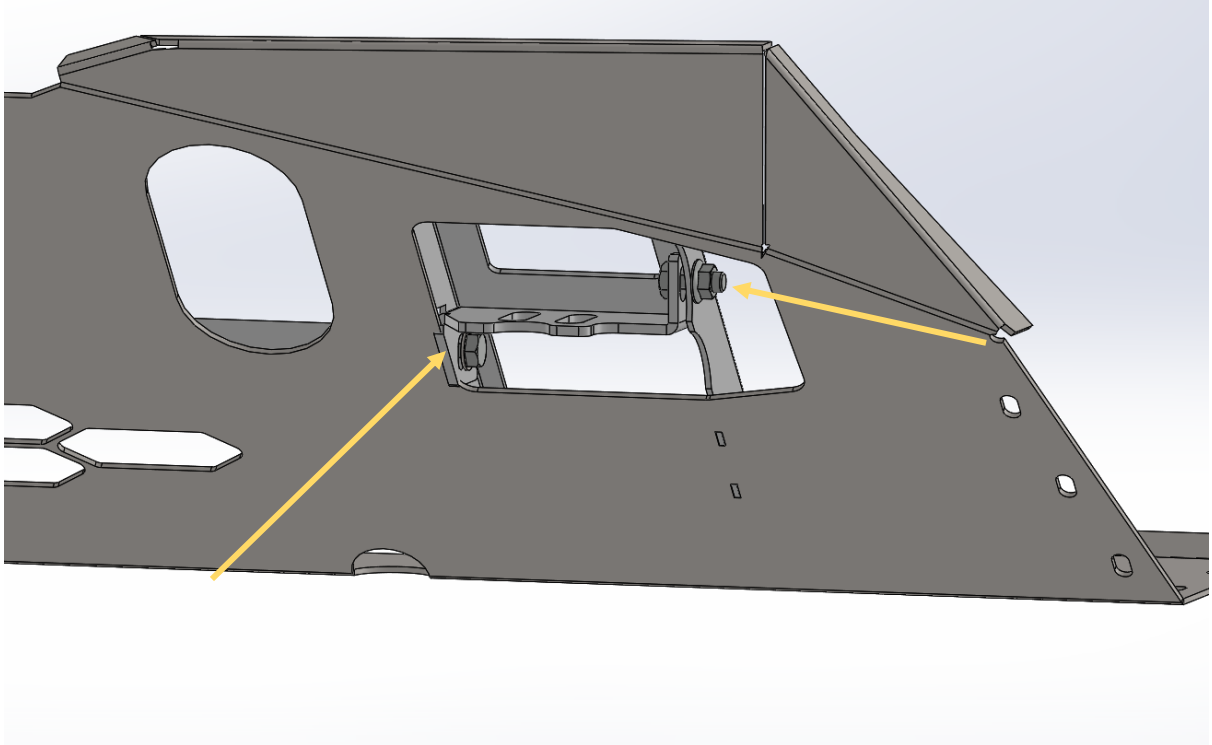

12. Fit the Pre runner mount brackets to Tow Points as shown with M10x25 bolts, washers and flange nuts.

    Complete for both sides of the plate.

TOOLS REQUIRED

16 or 17mm Spanner or socket (depends on our supplier)

FASTENERS

M10x25 (4)
M10 FW (4)
M10 FN (4)

USA Vehicles ONLY – Option 1 Removing the Crash Beam

13. For US Vehicles it is necessary to either remove or modify the crash beam. If removing, follow the next steps.

14. Remove the two clips securing top bumper trim to the radiator crossmember.

TOOLS REQUIRED

Trim tool
Or
Flat head screwdriver

FASTENERS

Retain factory clips

15. At the wheel arch on both sides you will need to pry out 2 plastic rivets. You can also drill out the center of the rivet if you're struggling to pry it out.

16. Remove screw shown with 10mm socket or spanner.

TOOLS REQUIRED

Trim tool,
Or
Flat head screwdriver

10mm socket or spanner

FASTENERS

Discard plastic rivets

USA Vehicles ONLY – Option 1 Removing the Crash Beam

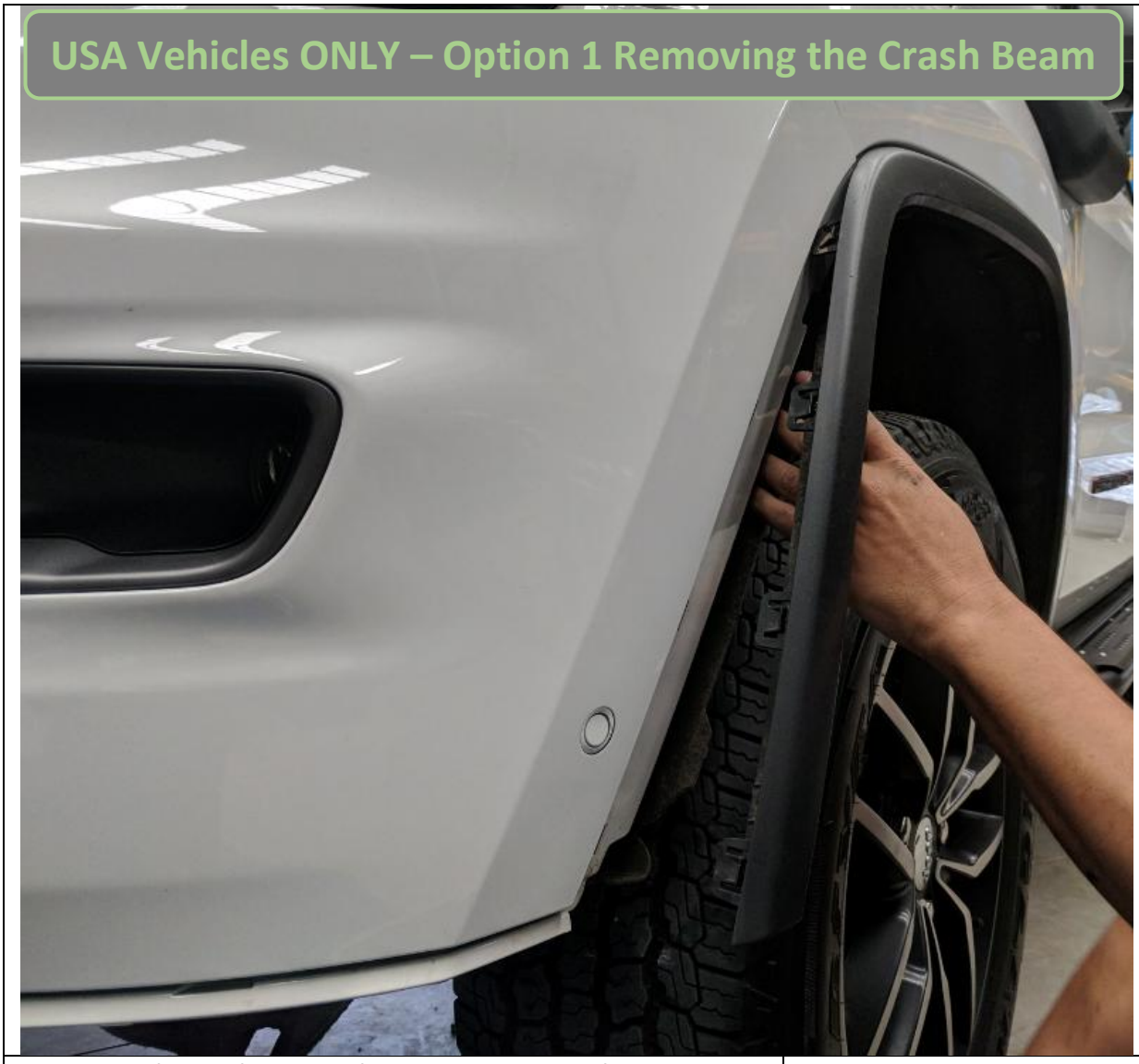

17. Pull factory flare away from bumper, using a flat head screwdriver release at least 2 of the push in clips on top edge being careful not to break them as you pull the flare away from the body.

TOOLS REQUIRED

Flat head screwdriver

FASTENERS

USA Vehicles ONLY – Option 1 Removing the Crash Beam

18. Pull headlight washer out by hand and detach retaining clips allowing mechanism to retract and remove outside panel.

TOOLS REQUIRED

FASTENERS

19. Pull the edge of the bumper away from the body.

TOOLS REQUIRED

FASTENERS

USA Vehicles ONLY – Option 1 Removing the Crash Beam

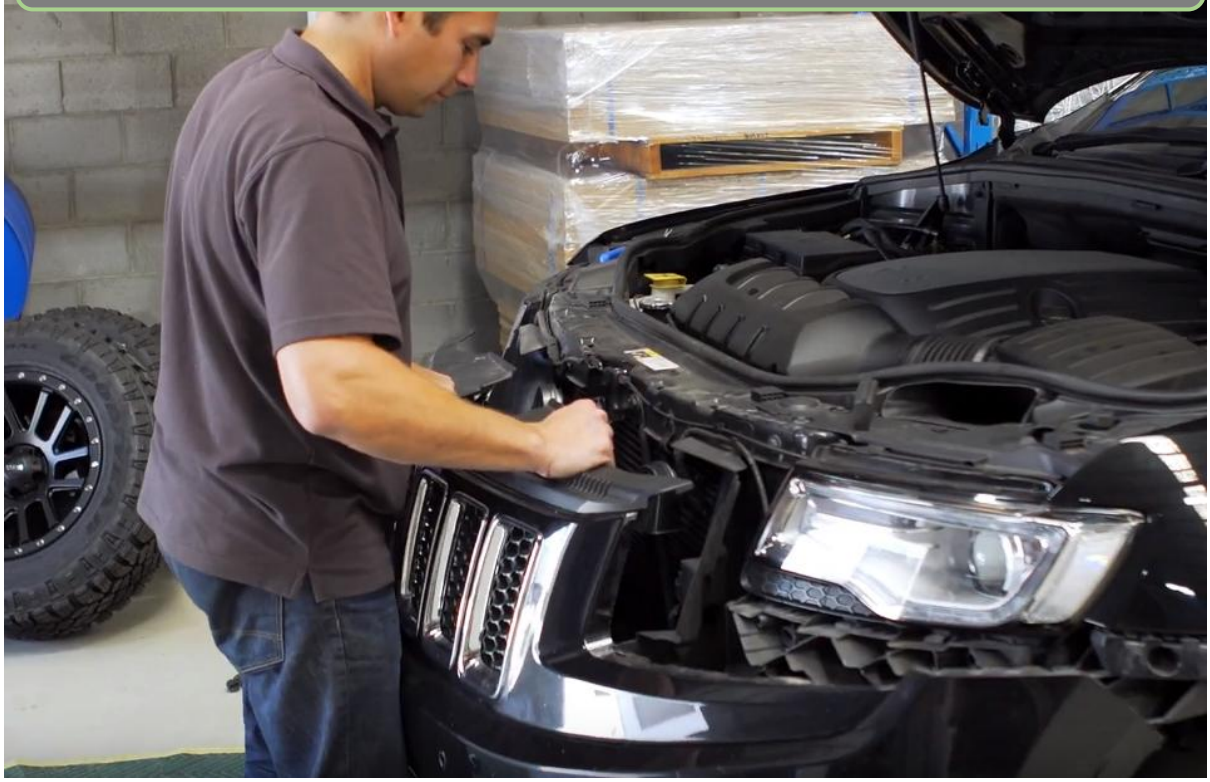

20. Lifting the top section ever so slightly you can release clips holding in the top section and pull the remainder of the bumper away.

TOOLS REQUIRED

FASTENERS

USA Vehicles ONLY – Option 1 Removing the Crash Beam

21. Pull out 2 plastic Christmas tree clips holding foam in

TOOLS REQUIRED

Trim tool
Or
Flat head screwdriver

FASTENERS

USA Vehicles ONLY – Option 1 Removing the Crash Beam

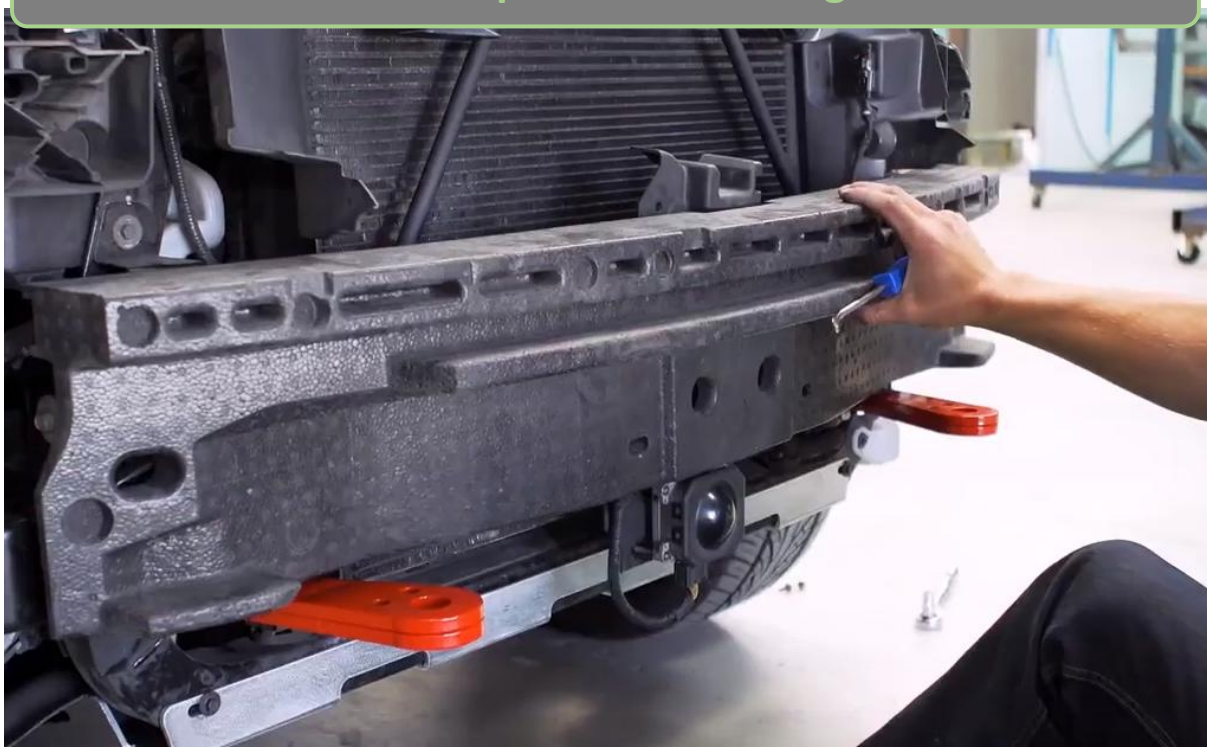

22. Pull off the foam impact absorber.

TOOLS REQUIRED

FASTENERS

USA Vehicles ONLY – Option 1 Removing the Crash Beam

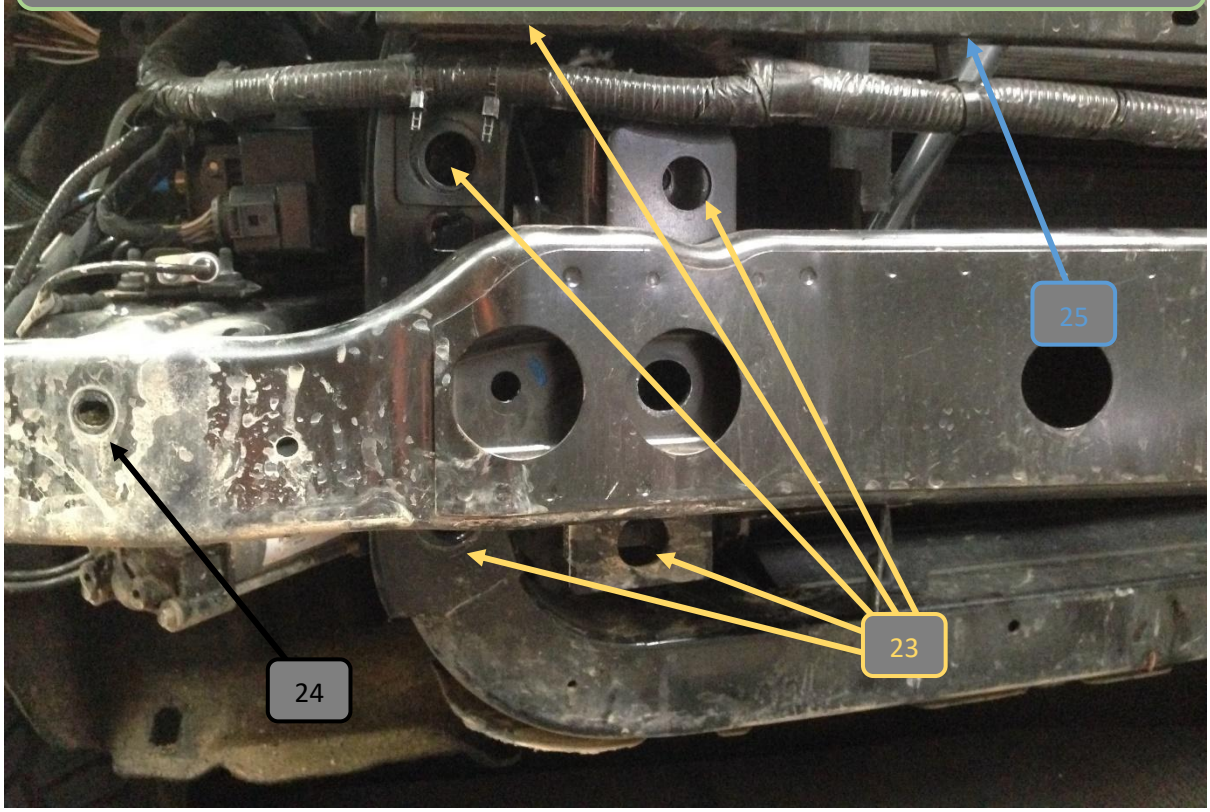

23. Remove Crash beam by removing 8 x M8 bolts (4 per side with 13mm tool) and 2 x M6 bolts with 10mm tool.

24. If equipped with air suspension remove 2 flange nuts holding compressor onto bumper reinforcement.

25. Using trim tool or similar remove all loom securing keepers holding wiring onto bumper reinforcement.

TOOLS REQUIRED

10mm spanner or socket
13mm spanner or socket

Trim tool
Or
Flat head screwdriver

FASTENERS

Retain all fasteners, some will be reused

USA Vehicles ONLY – Option 1 Removing the Crash Beam

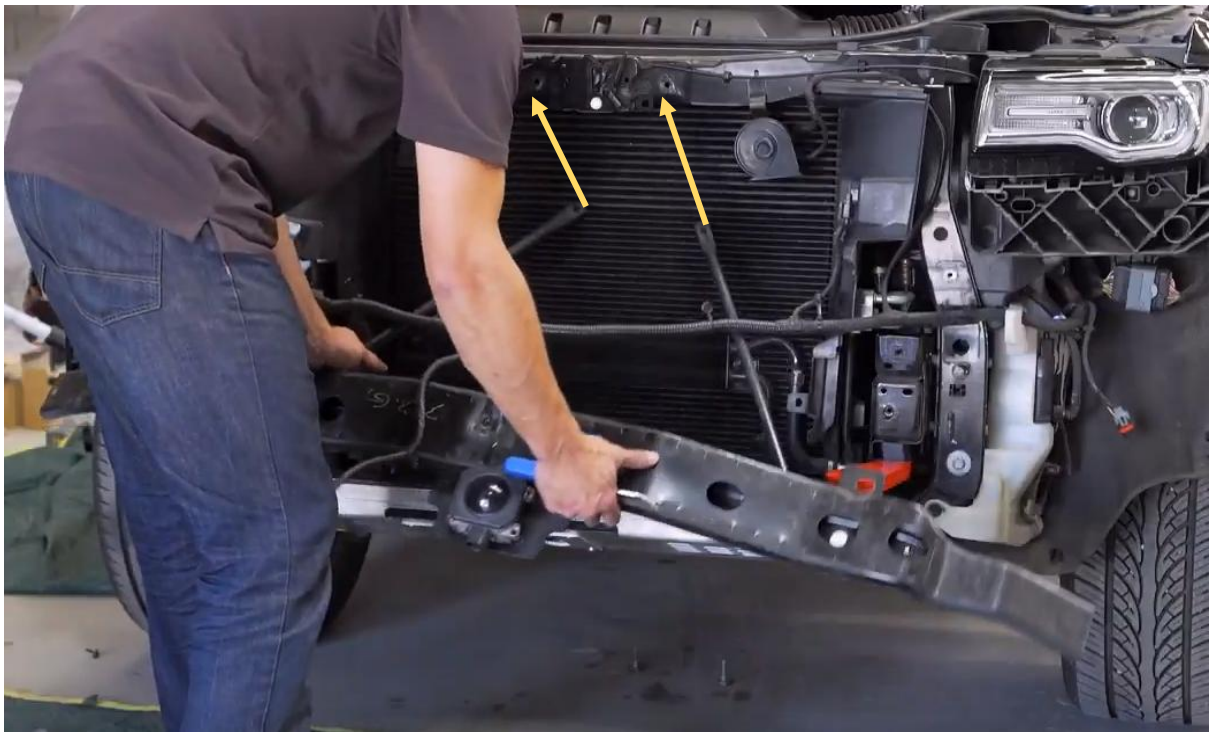

26. Remove 2x screws with 13mm tool holding round support bars from top of bonnet support then remove entire reinforcement bar.

TOOLS REQUIRED

13mm socket or spanner

FASTENERS

Retain for reuse

USA Vehicles ONLY – Option 1 Removing the Crash Beam

27. If vehicle is fitted with Air Suspension, fit Air suspension bracket B-0087 as shown to secure the suspension compressor.

28. If no air suspension fitted you can discard this bracket.

29. Re-Fit the top section of the bumper, following the removal instructions in reverse order.

TOOLS REQUIRED

13mm socket or spanner
15mm socket or spanner

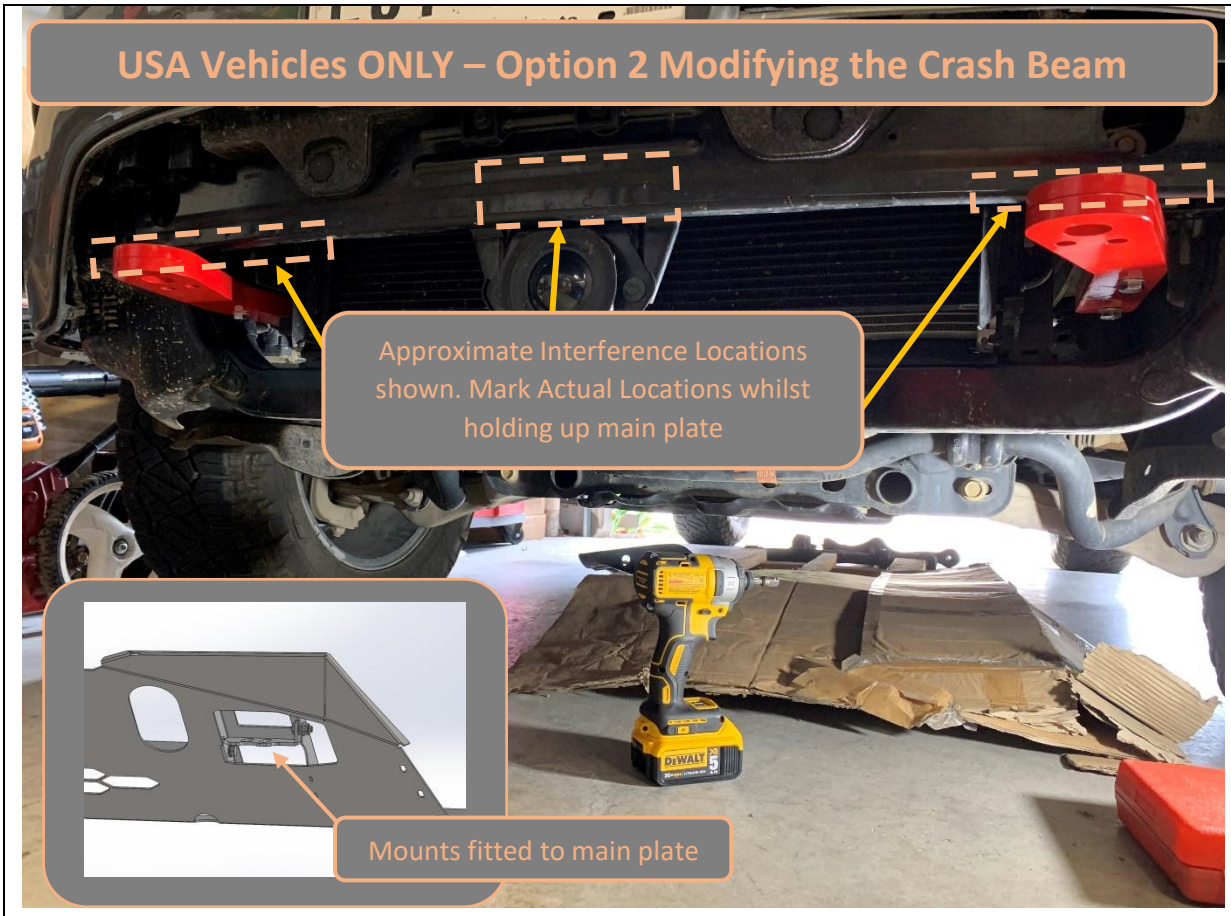

30. If you don't want to remove the crash beam you can instead modify it to suit the Prerunner by following the following steps.

31. Take the main center plate of the Prerunner bumper (with mounts already attached per step 12), and hold up to the recovery points, attempting to line up the recovery point holes with the mount holes.

32. The crash beam will interfere preventing alignment of the holes. Mark area where crash beam interferes with Prerunner using paint pen.

33. If fitting to vehicle fitted with Adaptive cruise, also mark area where adaptive cruise module, when mounted to the Pre Runner will interfere through the center opening in the Pre Runner plate.

34. After marking locations, Lower the main plate and remove the tow hooks for better access to work area.

TOOLS REQUIRED

Marker

USA Vehicles ONLY – Option 2 Modifying the Crash Beam

35. Cut away the areas marked on the crash beam.

36. This can be completed either with the crash bar on the vehicle, or with it removed.

37. If cutting on the vehicle mask all finished surfaces and crash absorption foam parts to protect from sparks.

    To get better access to make the cuts, it is recommended (but not required) to remove the upper bumper cover and optionally the foam absorption piece per Option 1 (Steps 13 Through 22), and after the cuts and fitment are verified, reinstall the upper bumper cover and foam piece (As per Step 29).

38. If cutting off the vehicle, remove the crash bar from the car following the steps from Option 1 (Steps 13 thru 26).

39. It can be helpful to drill hole in corner of the cut area before cutting to create neat corners.

TOOLS REQUIRED

Electric Drill
Angle Grinder
or
Reciprocating Saw

USA Vehicles ONLY – Option 2 Modifying the Crash Beam

40. Coat all exposed cut edges with paint pen or primer to prevent corrosion.

41. If the Crash beam was removed for the cut, re-fit to the vehicle to check clearance, using reverse of the removal steps.

TOOLS REQUIRED

Paint Pen
Or
Automotive Primer

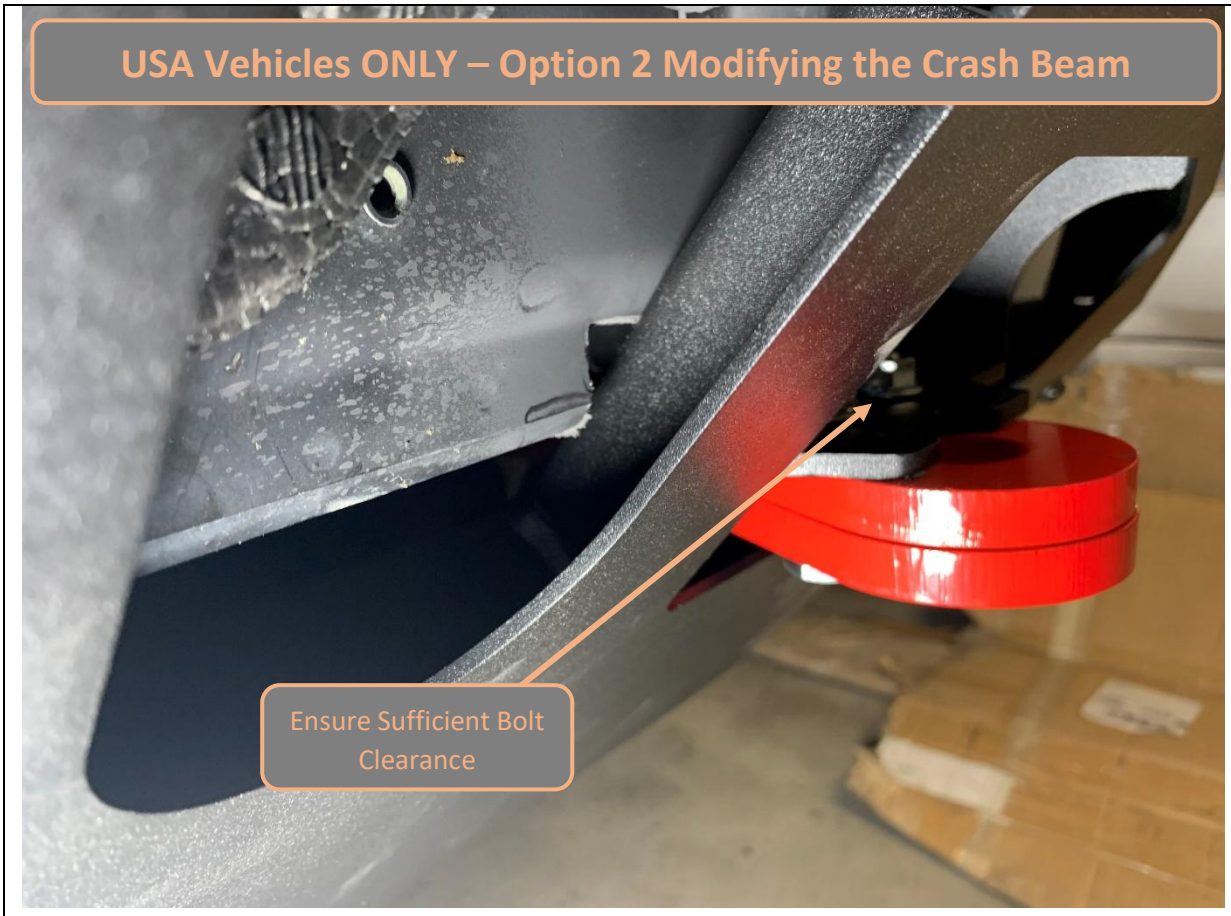

42. Re-fit the tow points then fit Prerunner center plate. There should be sufficient clearance such that the Prerunner does not touch the crash beam, and that the M10x45 bolts can pass easily through the mount and tow point.

    Additionally, if ACC is fitted, ensure that the ACC Sensor has sufficient clearance to point straight ahead without touching crash beam.

    If it interferes, remove the Prerunner and re-trim the crash beam.

43. Once Satisfied with clearance, remove main plate and torque up the Tow point bolts to 70Nm (51 Ft Lbs.) using Torque Wrench.

TOOLS REQUIRED

Paint Pen
Or
Automotive Primer

Torque Wrench
16mm Socket

ALL VEHICLES – FIT PRERUNNER

44. If fitting Offroad Animal bash plate, do so at this stage, following the separate bash plate instructions.

45. Do not fit all 3 M6 bolts securing underside of bash plate to crossmember, just loosely fit 1x M6 bolt to hold bash plate in place.

46. If not fitting bash plate replace OE plastic radiator cover using OE fasteners removed in step 3.

TOOLS REQUIRED

Refer to Bash Plate instructions

FASTENERS

Refer to Bash Plate instructions

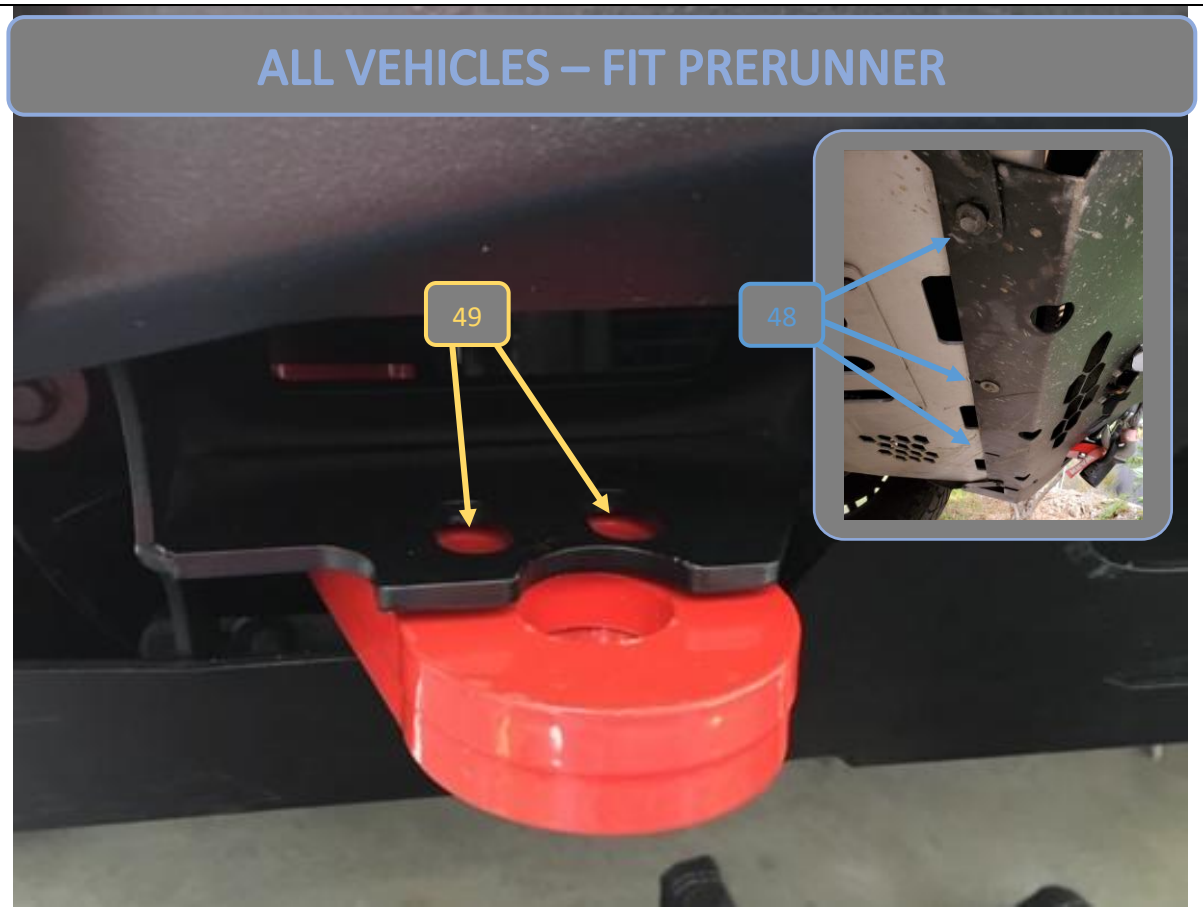

47. Lift Main plate on to Jeep. Mounting bracket, fixed to the main plate fits over tow points as shown.

48. Loosely fit 3 M6 OE Large flange bolts on underside to hold main plate up.

    Note: If fitting in conjunction with Offroad Animal Bash Plate the Prerunner plate must fit over the bash plate – see inset image.

49. Use M10x45 hex bolts, flat washers and flange nuts through Pre-Runner Upper Mounts and secure to tow points. Leave loose for now.

TOOLS REQUIRED

FASTENERS

Factory M6 bolts
M10x45 hex (4)
M10 Flat washer (4)
M10 Flange nut (4)

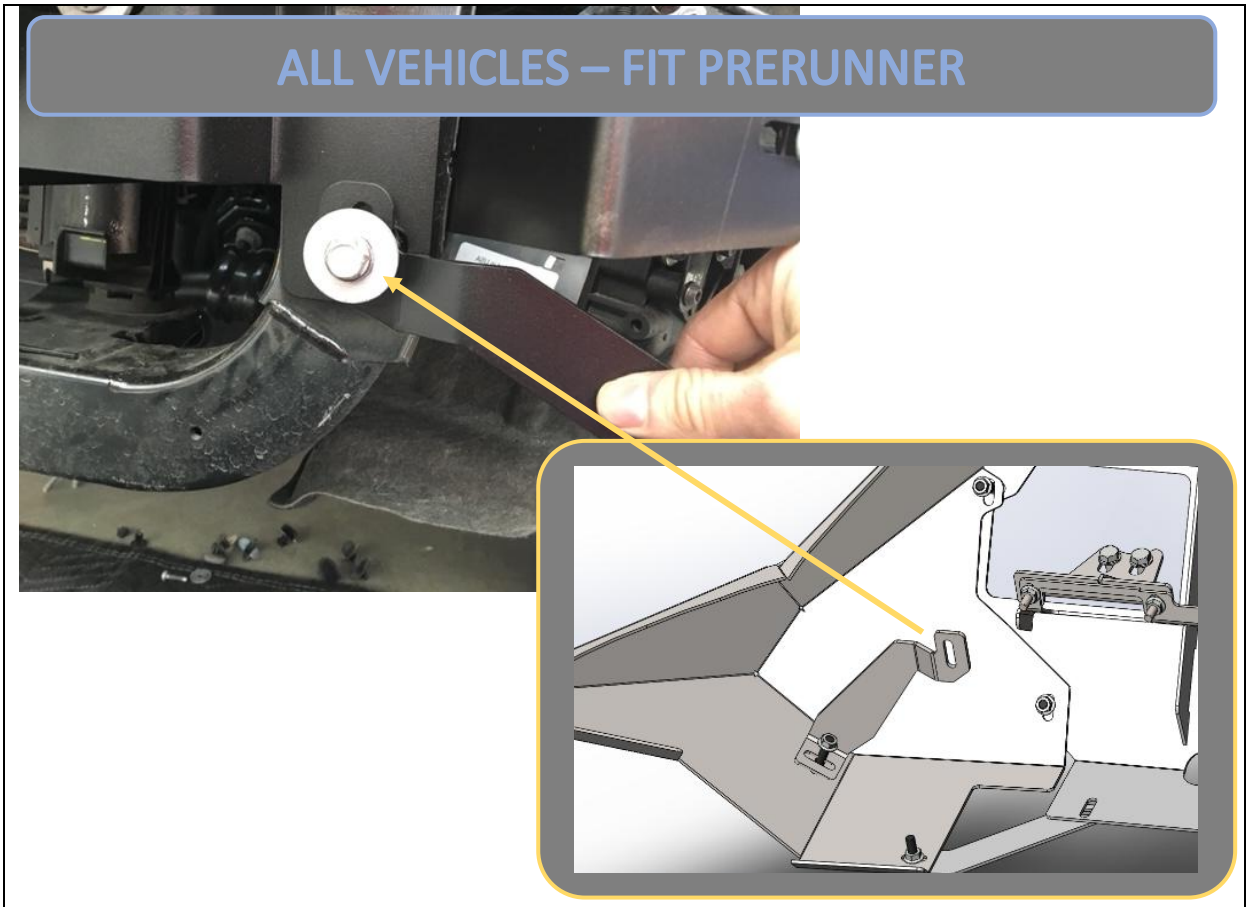

50. Fit Pre runner wing support as shown in bottom right picture. One end of side wing shown with M8x30 button head cap screw flat washer and flange nut, and one bolt location shown in pic on the left reusing factory bolt.

51. Repeat for other side.

Note: ANGLE OF SUPPORT MAY NEED TO BE ADJUSTED WHEN FITTING CENTER SECTION TO SUIT WING SITTING FLUSH AND LEVEL WITH CENTER SECTION

TOOLS REQUIRED

5mm Allen key
13mm socket

FASTENERS

M8x30 BHCS black (2)
M8 flat washer black (2)
M8 Flange nut (2)

52. Fit pinch weld to top edge of wings like shown

TOOLS REQUIRED

FASTENERS

ALL VEHICLES – FIT PRERUNNER

53. Fit wings to center panel, as shown. Fit top bolt first by putting bolt through front face and using your fingers behind to hold the flange nut.

54. Repeat for other side.

55. If Required adjust the angle of the wing support to ensure wing fits neatly with bumper and center panels.

TOOLS REQUIRED

5mm Allen Key

FASTENERS

M8x20 BHCS black (2)
M8 flat washer black (12)
M8 flange nut (2)

ALL VEHICLES – FIT PRERUNNER

56. You can reach the rest of the nuts on the back of the Pre runner by reaching arounds from under the bumper. Leave all bolts loose at this moment.

57. Repeat for other side.

TOOLS REQUIRED

5mm Allen key

FASTENERS

M8x20 BHCS black (8)
M8 flat washer black (8)
M8 flange nut (8)

ALL VEHICLES – FIT PRERUNNER

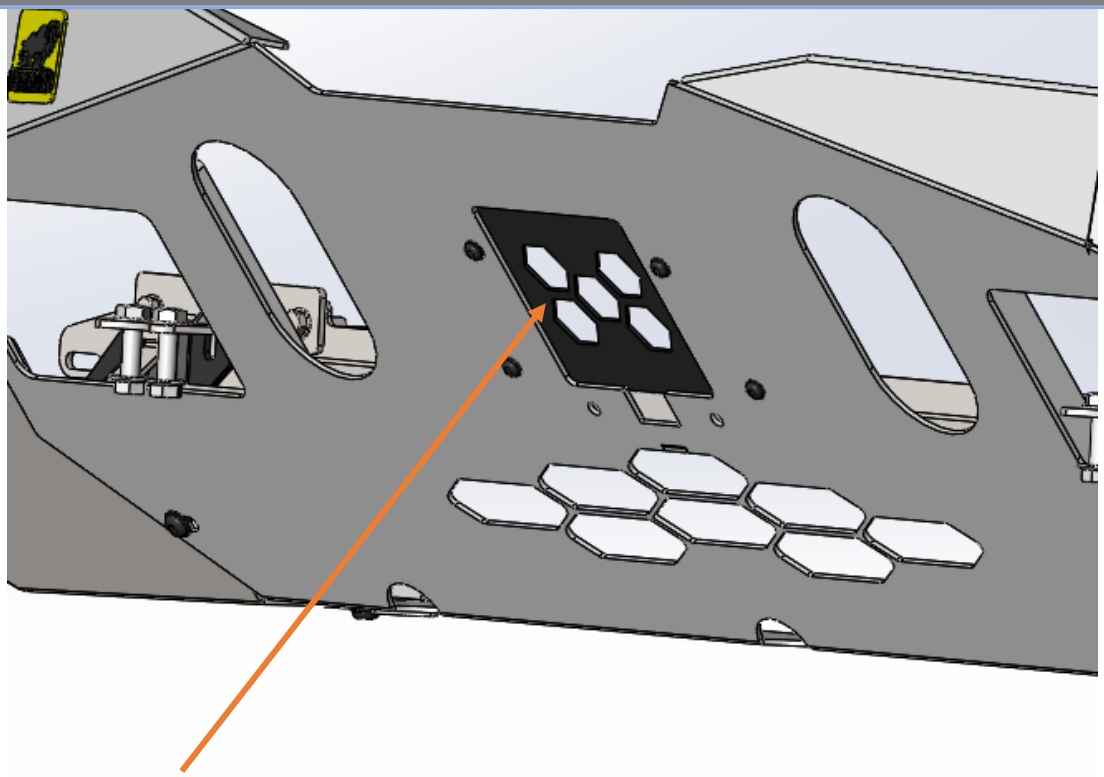

58. If no Adaptive cruise control is fitted, then fit ACC cover plate with M8 x 16 button head cap screws (black zinc), flat washers and flange nuts. Once complete skip to step 65.

59. If Adaptive cruise is fitted complete following steps 60 through 64.

TOOLS REQUIRED

4mm Allen Key

FASTENERS

M6x16 BHCS black (4)
M6 flat washer black (4)
M6 flange nut (4)

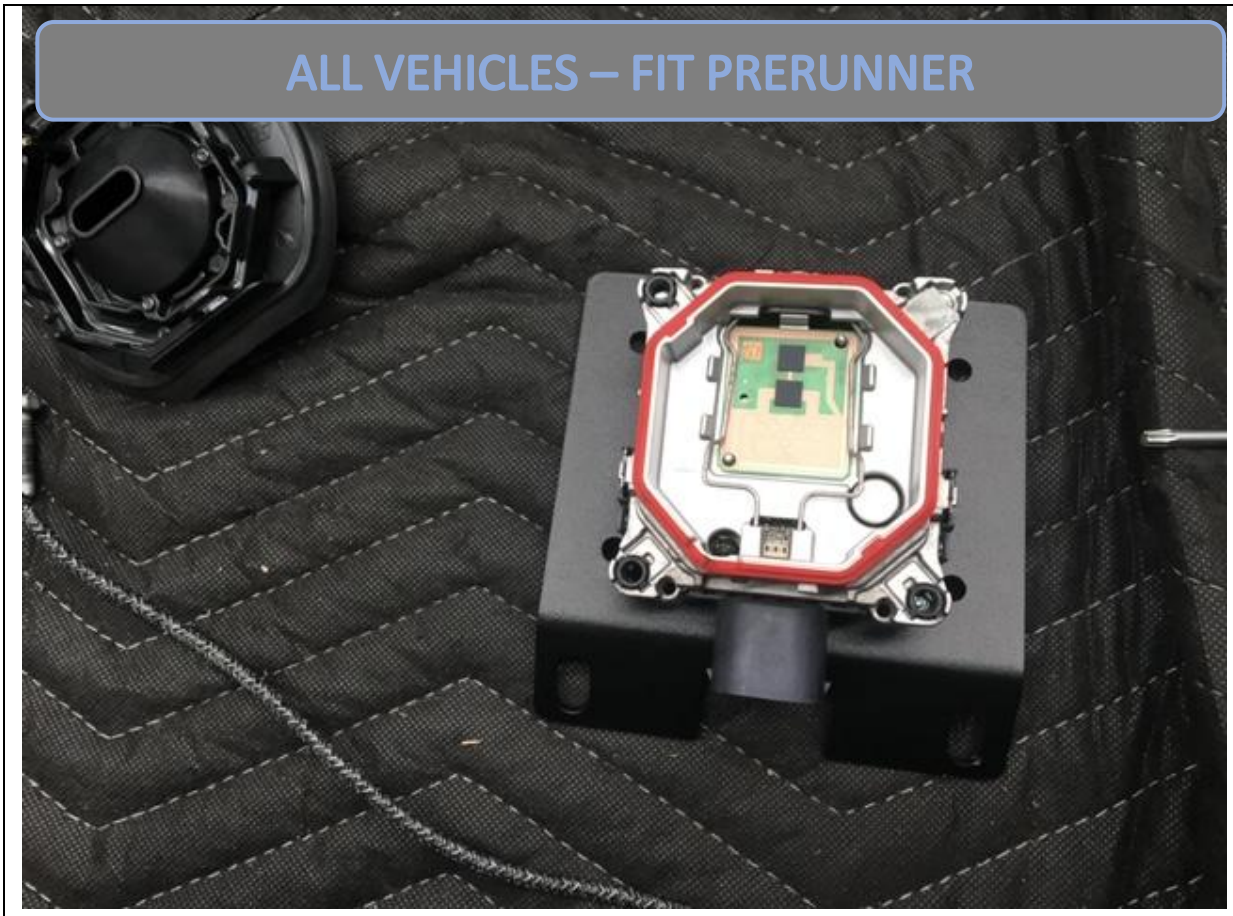

60. If you have Adaptive Cruise control you will need optional Offroad Animal Part “PR-JGC-WK2-14-ASM3”

61. Fit Radar sensor to Acc Mount Wk2 plate **(Note Mount kit comes with two different mounting plates, use the plate with large circle cut in middle)** with supplied M5x30 pan head screws in optional kit. This will involve using a flat screwdriver to remove the outside cover and remove factory adjusting screws and replace with supplied M5x30 Pan heads.

TOOLS REQUIRED

Phillips head screwdriver

FASTENERS

M5x30 Pan head (4)

62. Feed Sensor and plate through Main plate and secure to main plate with supplied M8x30 Hex bolts, flat washers and flange bolts from optional kit.

63. Ensure sensor is facing forward and straight ahead. If pointing down or up it will not function properly. Adjust till it's pointing straight ahead. A test drive can confirm this.

TOOLS REQUIRED

13mm Socket or spanner

FASTENERS

M8x30 Hex bolts (2)
M8 flat washer (2)
M8 flange nut (2)

64. Secure ACC cover to main plate with M6x16 button head cap screws washers and flange nuts.

TOOLS REQUIRED

4mm Allen key

FASTENERS

M6x16 BHCS black (4)
M6 flat washer black (4)
M6 flange nut (4)

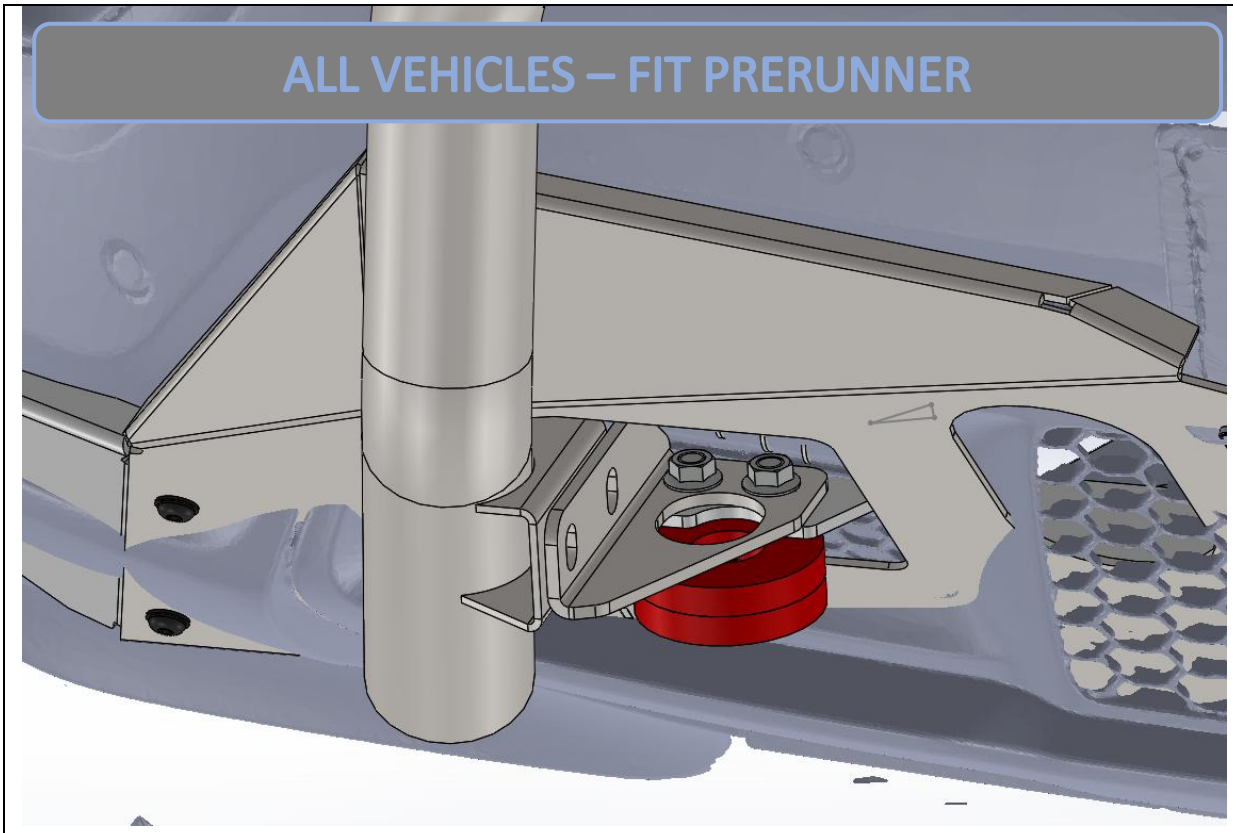

65. If fitting and Offroad Animal Nudge bar you can do so now as shown with bracket B-0325R and B-0325L.

    Note: The nudge bar kit comes with 2 different types of brackets. Ensure you use the set that matches the images included in these instructions

66. **Bracket B-0325 Fits ON TOP of the pre runner Bracket. You will need to replace the M10x45 Bolts with the M10x55 Bolts supplied in the Nudge Bar Kit.**

67. **Note you must use a soft shackle or D shackle instead of a bow shackle if running the nudge bar. Without the nudge bar you can run a 3/4" bow shackle**

68. Torque all bolts

TOOLS REQUIRED

16mm spanner or socket
5mm Allen Key

FASTENERS

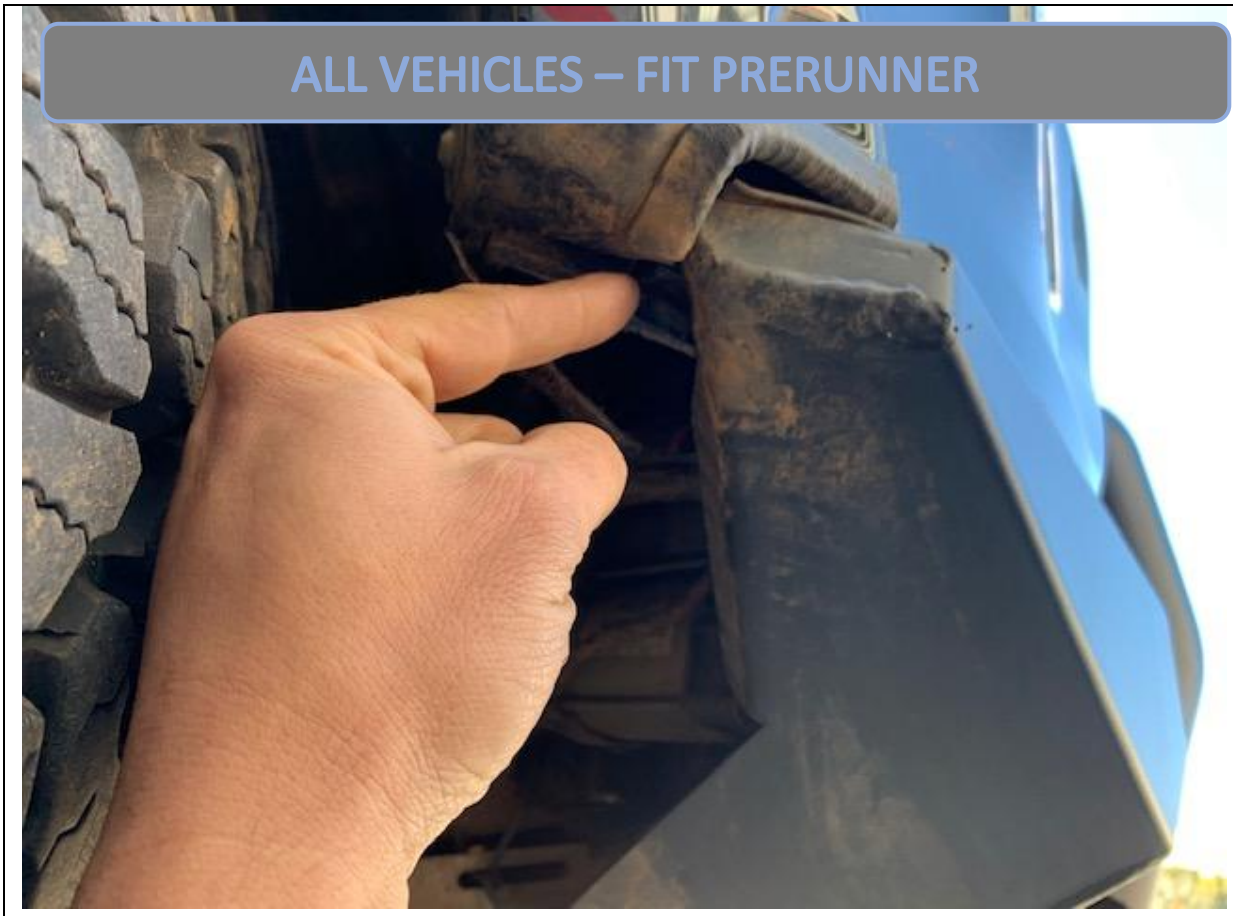

69. If your Jeep is equipped with parking sensors and they are going off as they see the new bumper you can fix this by adding a cable tie to the slot that originally holds the lower air dam being pointed to in the picture.

    Use the cable tie to pull this side of the bumper into the middle of the car. What this does is flex the bumper away from the new pre runner and points the sensor in a slightly different direction.

TOOLS REQUIRED

FASTENERS

Cable ties (not supplied)

70. Fit logo plate to bumper. If fitting nudge bar hold off until that is on before doing this step.

71. You are done, crack a beer, sit back and enjoy the coolness that is your Jeep now.

TOOLS REQUIRED

FASTENERS